porvair filtration group

Biofil™ II

Polyethersulphone Membrane Cartridge Filters

A range of microbially rated cartridge filters from Porvair Filtration Group, featuring the latest developments in membrane technology, Biofil™ II cartridges are based on a naturally hydrophilic polyethersulphone (PES) membrane with a mirrored asymmetric pore structure. When combined with quality all-polypropylene cartridge components and high integrity manufacturing techniques common to all Porvair cartridge filters, the polyethersulphone membrane provides a high strength, long life cartridge of consistently precise microbial retention.

Biofil™ II cartridges exploit the narrow pore size distribution and high void volume of the media to provide a choice of cartridges capable of meeting the requirements of most applications. Careful media selection ensures that Biofil™ II cartridges are also very suited to critical particle control down to 0.04 micron ratings. Biofil™ II cartridges offer high flux rates and low differential pressures, a feature common to polyethersulphone membranes.

Biofil™ II cartridges benefit from the low non-specific protein binding characteristics of polyethersulphone membranes. They are also highly resistant to integrity failure caused by steam sterilisation and have excellent chemical compatibility characteristics. Furthermore, since they will not hydrolyse, Biofil™ II cartridges are ideal for use in ultra pure water supply systems (18MΩ.cm).

As a consequence Biofil™ II cartridges provide a combination of features and benefits not hitherto available from cartridges based on PVDF, nylon, mixed esters of cellulose or polysulphone membranes. They are suitable for applications ranging from sterile filtration, bioburden reduction and the clarification of a wide range of process liquids and end products.

Applications

Biofil™ II cartridges are suitable for the sub-micronic filtration of a wide range of process liquids, in applications where the characteristics of a naturally hydrophilic membrane are required.

Typical applications include:

- **Biopharmaceuticals**
  For the sub-micronic filtration of ingredients, intermediates, make-up waters and final products, including sterilisation, clarification and bioburden reduction.
- **Ophthalmic solutions**
  Shelf life assured through the low adsorption of preservatives, such as Benzalkonium Chloride (BAK).
- **Electronics and semiconductors**
  For the sub-micronic filtration of process water and chemicals, including solvents, developers and photoresists. Applications typically include central water plant treatment and critical 'wet bench' point of use filtration.
- **Fine chemicals**
  For the clarification and sterilisation of a wide range of process chemicals.
- **Beverages**
  For the clarification and sterilisation of various beverages, including the removal of yeast and spoilage organisms. Low colour removal is an additional advantage.
- **Pure water supply**
  For use in ultrapure water treatment systems (including Water-For-Injection), as either a sterilisation filter or for bioburden reduction.

World Class Filtration Solutions

Features and Benefits

- **Biofil™ II cartridges**
  Careful media selection means that Biofil™ II cartridges are available to suit a wide range of process critical and general purpose applications.
- **Guaranteed microbial ratings**
  Biofil™ II cartridges are validated for bacterial removal according to HIMA guidelines and ASTM F838-05, with a log reduction value >7. They are therefore suitable for applications requiring sterilising grade filtration.
- **Low protein binding**
  Biofil™ II cartridges have excellent low protein binding characteristics, typically 10 times lower than nylon, 2 times lower than polysulphone and similar to PVDF.
- **Will not hydrolyse**
  Compared with other membranes such as nylon, the polyethersulphone membrane used in Biofil™ II cartridges is extremely resistant to hydrolysis. Capable of exposure in excess of 2 years, they are ideal for hot deionised water applications.
- **Excellent chemical compatibility**
  Resistant to many process chemicals, Biofil™ II cartridges are suitable for use in a wide range of process applications.
- **Cartridge integrity and low TOC levels**
  Each Biofil™ II module of every cartridge is individually integrity tested. Each complete filter cartridge is flushed with pure water which is inspected daily for pyrogens using the standard LAL test. When required, they can be pulse flushed with 18MΩ.cm pyrogen-free ultra-clean water.
- **Suitable for steam sterilising**
  Biofil™ II cartridges incorporating a stainless steel support ring can be subjected to steam sterilisation at 135°C (275°F) without loss of integrity.
- **Full traceability**
  All Biofil™ II cartridges are individually and batch identified with a unique serial number. Each Biofil™ II cartridge is supplied with a Certificate of Quality and an operating instruction leaflet.
- **Controlled manufacturing environment**
  Biofil™ II cartridges are manufactured in an ISO Cleanroom environment by fully gowned staff, minimising the risk of contamination.

Cartridge Construction

Biofil™ II cartridges are manufactured from a multi-layer combination of irrigation mesh, filter membrane, membrane support and drainage material. Biofil™ II cartridges have optimal pleat geometry to maximise the available filtration area and to ensure an efficient flow through the cartridges.

An all thermal fusion bonded assembly process eliminates the use of resins and binders.

Manufactured as standard with injection moulded polypropylene inner and outer supports, Biofil™ II cartridges are designed with the strength necessary to withstand thermal stresses encountered during steam sterilisation and subsequent cooling. They can be steam sterilised and will retain total integrity following steaming at 135°C (275°F).

All components used in the construction of Biofil™ II cartridges are FDA approved to 21CFR and meet or exceed the latest EC Directives for Food Contact.

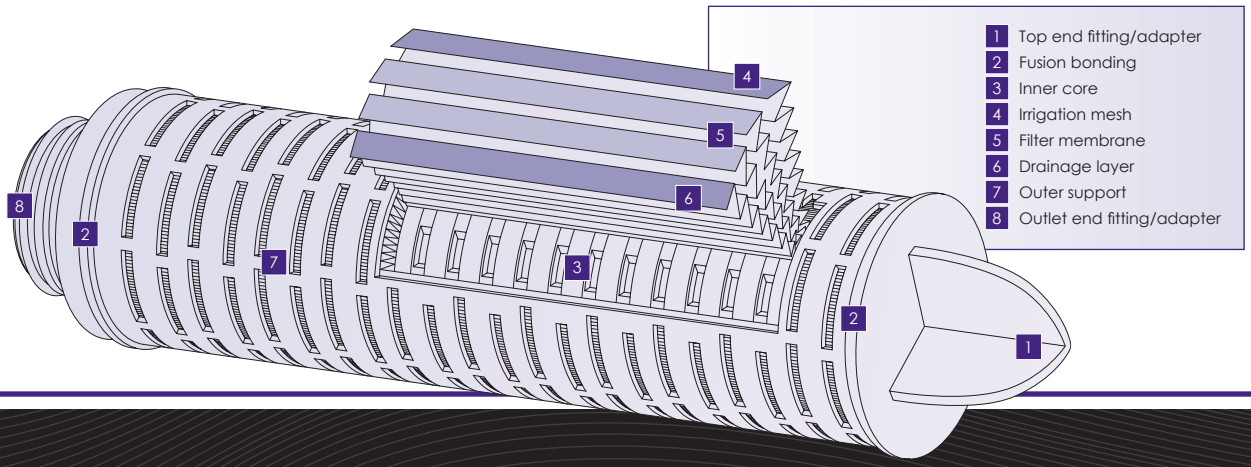

Materials of Manufacture

Filter membrane:	Polyethersulphone
Membrane support:	Polypropylene
Irrigation mesh (support):	Polypropylene
Drainage layer:	Polypropylene
Inner core:	Polypropylene
Outer support:	Polypropylene
End fittings:	Polypropylene
Support ring:	Stainless steel

Cartridge Dimensions (Nominal)

Diameter:	70mm (2.8")	
Length:	1 module:	Biofil™ II Junior
	1 module:	254mm (10")
	2 modules:	508mm (20")
	3 modules:	762mm (30")
	4 modules:	1016mm (40")

Effective Filtration Area

Absolute Microbial Rating	Effective Filtration Area (each 254mm (10") module)
0.04, 0.1, 0.2, 0.45, 0.65 and 1.2µm	0.69m² (7.4ft²)

Cartridge Treatment

Standard:	Cleaned and flushed with pyrogen-free water.
Rinsed:	Ultra-clean, pulse flushed to give a system resistivity of 18MΩ.cm.

Gaskets and O-Rings

FDA approved Ethylene Propylene, FEP encapsulated, Silicone, Viton® or Nitrile.

Maximum Differential Pressure

Normal flow direction at:	
20°C (68°F):	6.0bar (87psi)
80°C (176°F):	4.0bar (58psi)
100°C (212°F):	3.0bar (44psi)
120°C (248°F):	2.0bar (29psi)
Reverse flow direction at:	
20°C (68°F):	2.1bar (30psi)
80°C (176°F):	1.0bar (15psi)
100°C (212°F):	0.5bar (7psi)

Operating Temperature

Maximum continuous:	85-90°C (185-194°F)

Sterilisation

In situ steam 100 x 65 minute cycles at 135°C (275°F).
Hot water 100 x 20 minute cycles at 90°C (194°F).

Extractables

Minimum total extractables. Please refer to the Biofil™ II Validation Guide.

Integrity Testing

Each Biofil™ II module of every cartridge is individually integrity tested using the Diffusive Flow Test, which correlates to the HIMA and ASTM F838-05 bacterial challenge tests. Non-destructive integrity tests, such as Pressure Hold, Diffusive Flow and Bubble Point, can be performed by customers. Procedural details are available from **Porvair**.

Clean Water Flow Rates

- Typical clean water flow rate:
  A 254mm (10") Biofil™ II single cartridge exhibits the flow-**Δ**P characteristics indicated below, for solutions with a viscosity of 1 centipoise.
- Other solutions:
  For solutions with a viscosity of greater than 1 centipoise, multiply the indicated differential pressure by the viscosity in centipoise.

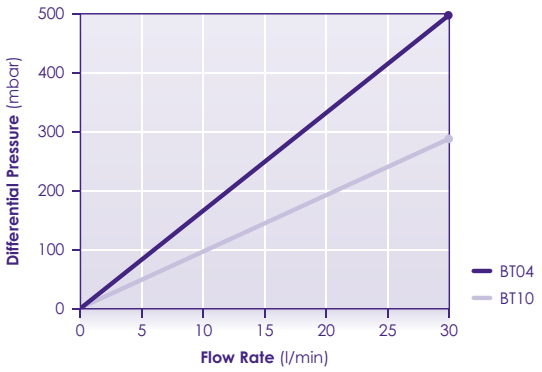

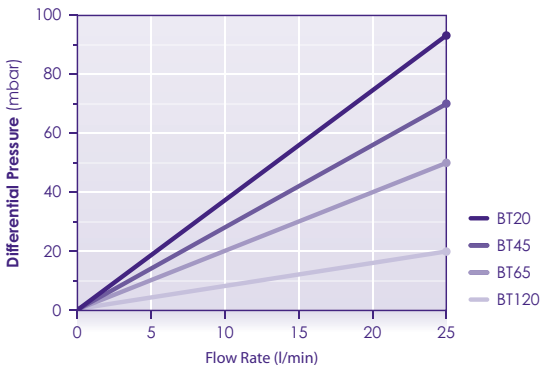

Range

Suitable for use in **Porvair** filter housings and as direct replacements for existing cartridges, Biofil™ II cartridges can be supplied with end fittings to suit most hardware installations without modification. They are available in single or multiple module units of 5, 10, 20, 30 and 40 inches, and in a choice of six microbial ratings: 0.04, 0.10, 0.20, 0.45, 0.65 and 1.2 micron. Biofil™ II Junior versions are also available. Each cartridge is supplied with all necessary seals or O-rings to ensure chemical compatibility.

Quality Assurance

Biofil™ II cartridges are manufactured in an ISO Cleanroom environment by staff fully gowned to minimise any risk of contamination during production. All cartridges are integrity tested and, if required, pulse flushed with 18MΩ.cm pyrogen-free ultra-pure water to give rapid resistivity recovery rates and low TOC levels. As a further safeguard, every cartridge is individually and batch identified with a unique serial number, allowing users to maintain their own process records.

Registered to ISO 9001, **Porvair Filtration Group** procedures are subject to high standards of quality assurance as demonstrated through its Drug Master File status.

Material Conformity and Validation

The bio-safety of all materials in the manufacture of Biofil™ II cartridges is assured by FDA approval, USP Class VI and meets or exceeds the latest EC Directives for Food Contact.

Biofil™ II cartridges have been tested and shown to be 100% retentive in line with HIMA and ASTM F838-05 guidelines for *Brevundimonas diminuta* challenge (0.2 micron), *Serratia marcescens* (0.45 micron) and with *Saccharomyces cerevisiae* (0.65 micron). To guarantee the bacterial retention performance of every cartridge, a correlation has been made between the bacterial challenge and integrity tests. A comprehensive validation guide for Biofil™ II cartridges is available on request.

Chemical Compatibility

The Biofil™ II materials of construction are compatible with a wide range of chemicals and solvents, however care must be taken to select the appropriate seal material. A comprehensive chemical compatibility guide is available. Since operating conditions vary considerably between applications, verification by the end user is recommended.

Filter Housings

Please contact a **Porvair Filtration Group** representative for further information on our range of filter housings.

porvair filtration group

Porvair Filtration Group Ltd.
Queensway
Stem Lane, New Milton,
Hampshire, BH25 5NN, UK
Tel: +44 (0)1425 612010
Email: info@porvairfiltration.com

Porvair Filtration Group Inc.
301 Business Lane
Ashland, Virginia 23005, USA
Tel: +1 804 550 1600
Email: infoUS@porvairfiltration.com

Porvair Filtration Group
Chengdong Area
Square Industrial Park, North District
Xiaonan Economic Development Zone
Xiaogan, 432000, China
Tel: +86 25 5758 1600
Sales: +86 151 0101 2510
+86 189 3686 6188
Email: infoCN@porvairfiltration.com

Porvair Filtration India PVT. Ltd.
Gangotri Glacier Annex, Kavesar
Opposite Vijay Nagari, Off Ghodbunder Road
Thane (W), 400607, India
Tel: +91 22 25 976464 / +91 22 25 976465
Email: infoIN@porvairfiltration.com

www.porvairfiltration.com

Porvair is a registered trademark of Porvair plc.
Biofil is a trademark of Porvair plc.
Viton is a registered trademark of DuPont Performance Elastomers L.L.C.
© Copyright 2010. Porvair Filtration Group Ltd. All rights reserved.
Whilst every effort has been made to ensure the accuracy of this document, due to continuous product development, the data contained is subject to constant revision and Porvair Filtration Group Ltd. reserves the right to change, alter or modify its contents.

PFG700 / Jun 2017 / Rev4: Aug 2019